Sound Control Technologies

RC-CUBBY-VB1™ Installation Instructions

Revision C, 1/12/2026

RC-CUBBY-VB1™ Cubby Wall Mount for Bose VB1 Video Bar

INCLUDED PART LIST

No. 1 Cubby Backbox, 804-1147 (Qty 1)
No. 2 Wall Clamps, 800-1107 (Qty 4)
No. 3 Camera Plate, 838-1147 (Qty 1)
No. 4 Adapter Plate, 837-1147 (Qty 1)
No. 5 Cubby Face Plate, 812-1147 (Qty 1)
No. 6 #10-16 x 1 1/2″ Flat Head Phillips Screw, 860-0011 (Qty 4)
No. 7 6-32 x 1/4″, Phillips Screw, White, 860-0058 (Qty 2)
No. 8 8-32 x 5/16″, Flat Head Phillips Screw, 860-0054 (Qty 2)

PARTS NOT INCLUDED

No. 9 Bose VB1 Video Bar (Qty 1)

ASSEMBLY INSTRUCTIONS

STEP 1: Install Cubby Backbox (No. 1, Qty 1) into wall opening with Wall Clamps (No. 2, Qty 4). Secure with #10-16 x 1 1/2″ Flat Head Phillips Screws (No. 6, Qty 4). For detailed instructions refer to the RC-CUBBY Installation Guide on www.soundcontrol.net.

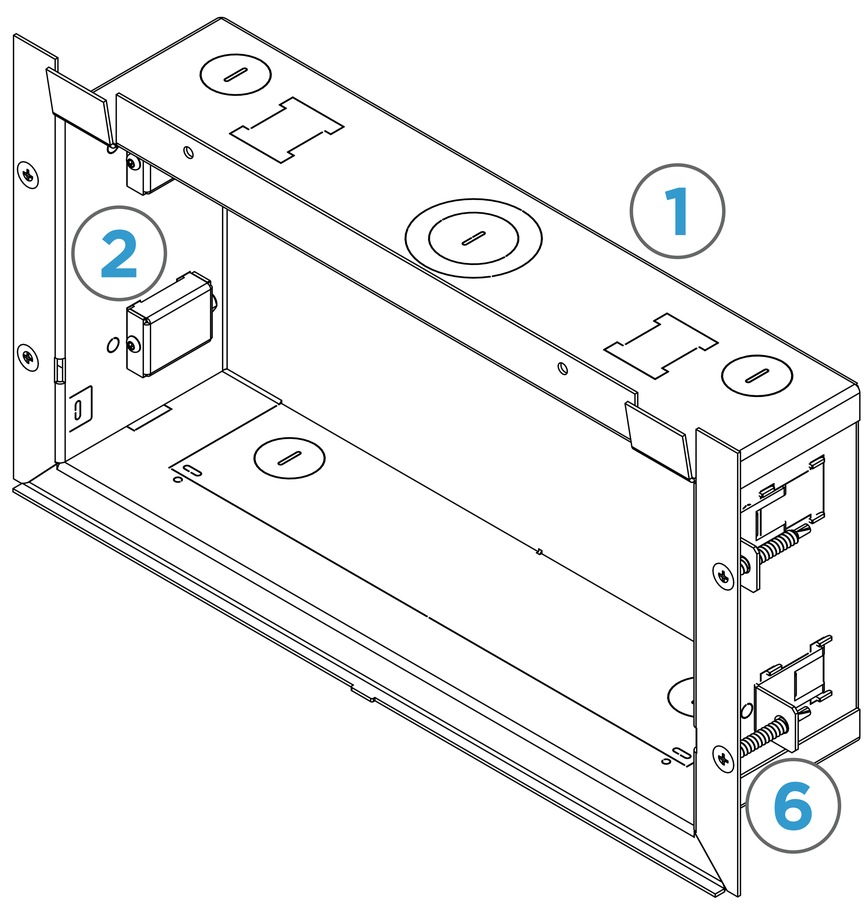

STEP 2: Partially install 6-32 x 1/4″ White Phillips Screws (No. 7, Qty 2) to Adapter Plate (No. 4, Qty 1).

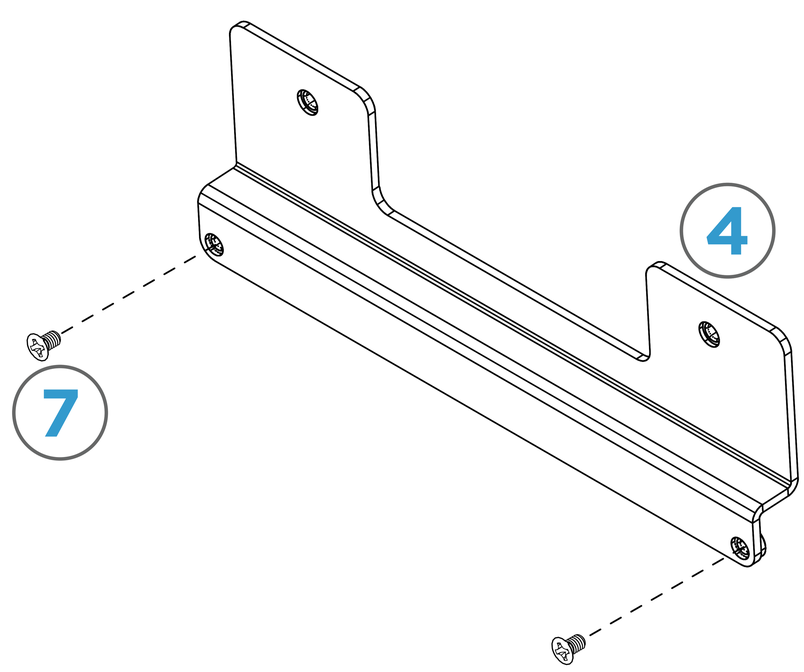

STEP 3: Tilt Bose VB1 (No. 9, Qty 1) down and attached to Adapter Plate using 8-32 x 5/16" Flat Head Phillips Screws (No. 8, Qty 2).

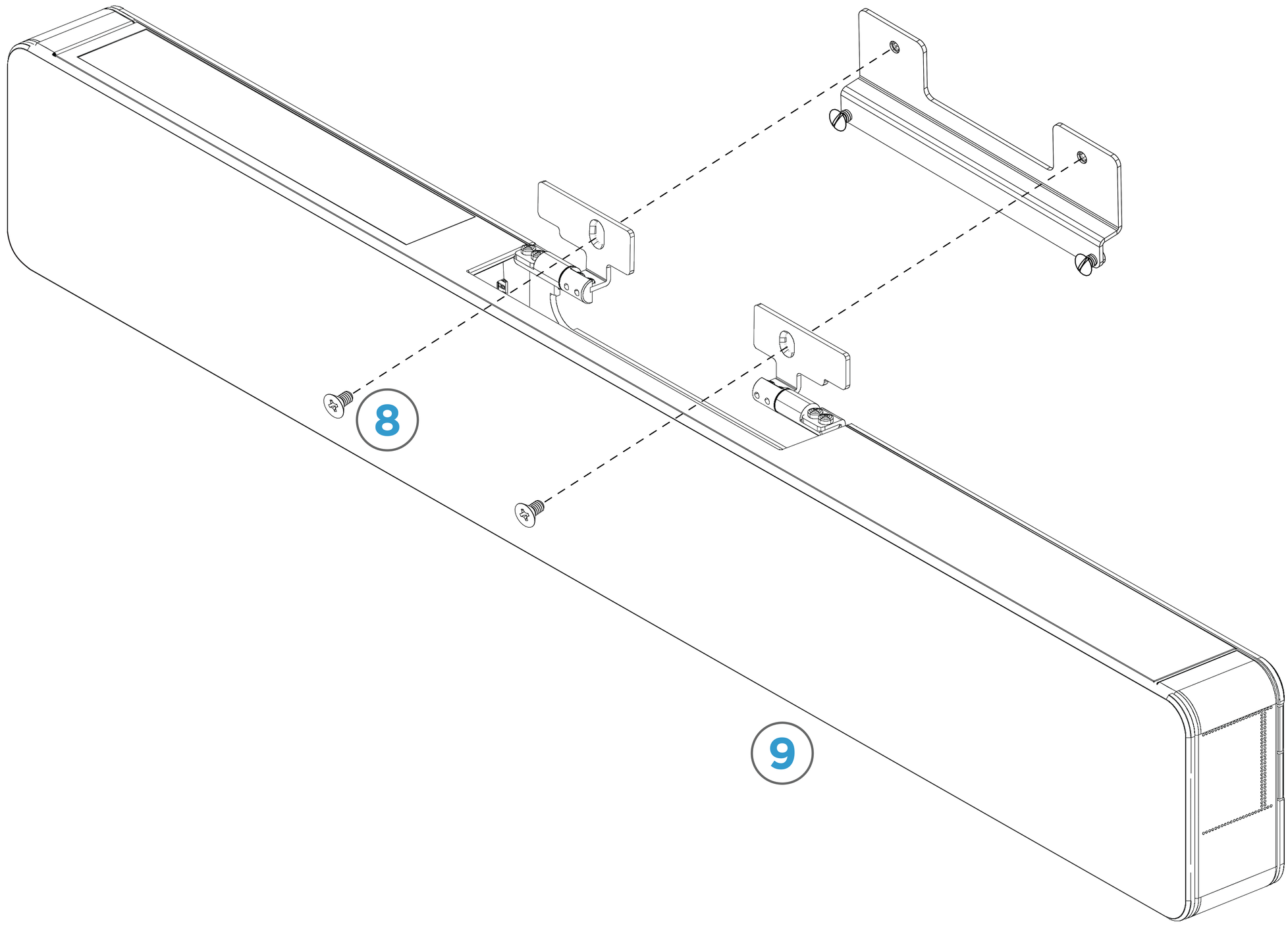

STEP 4: Slide Camera Plate (No. 3, Qty 1) down into Cubby slots (shown in red) and push forward to engage. Then pry tabs inward to lock Camera Plate in place.

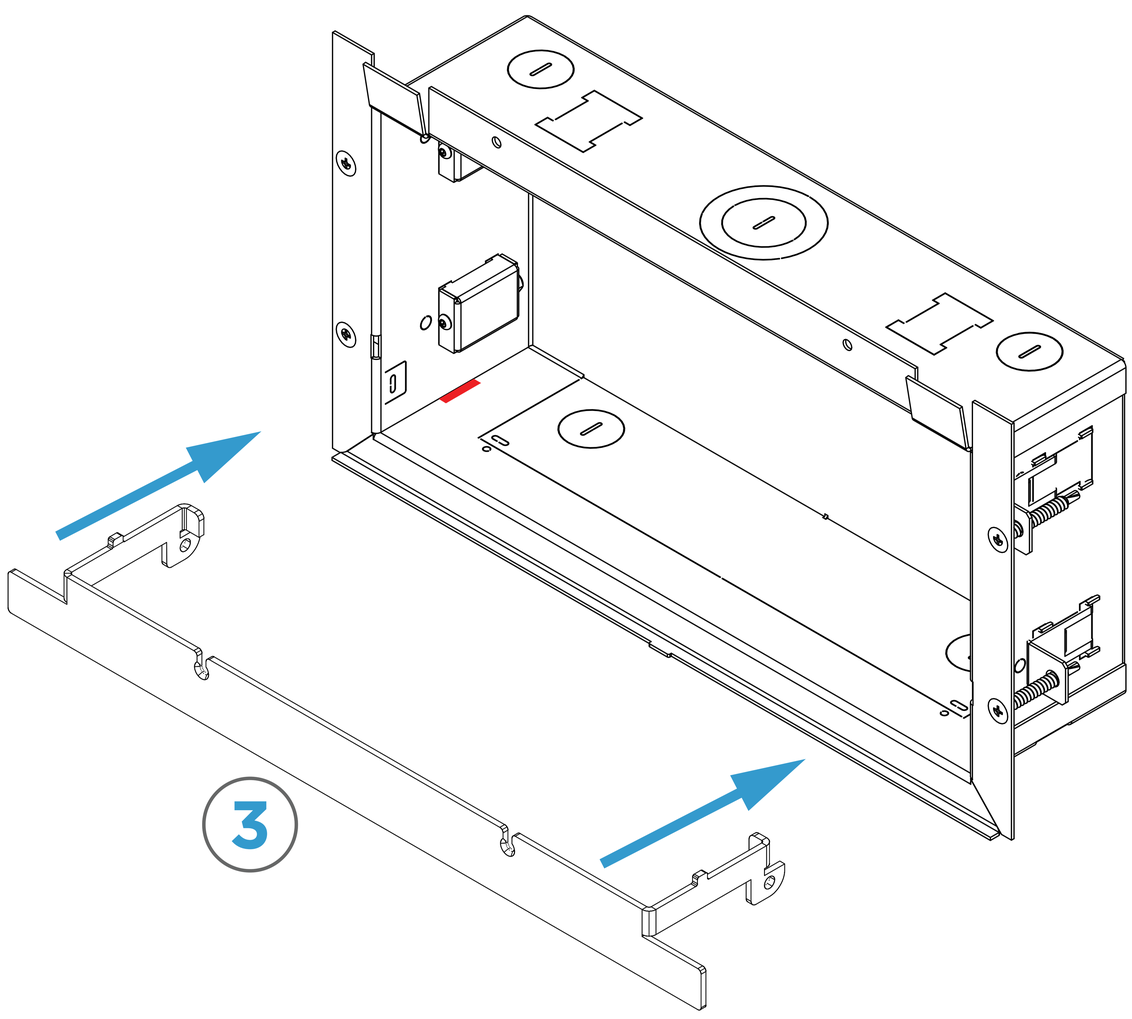

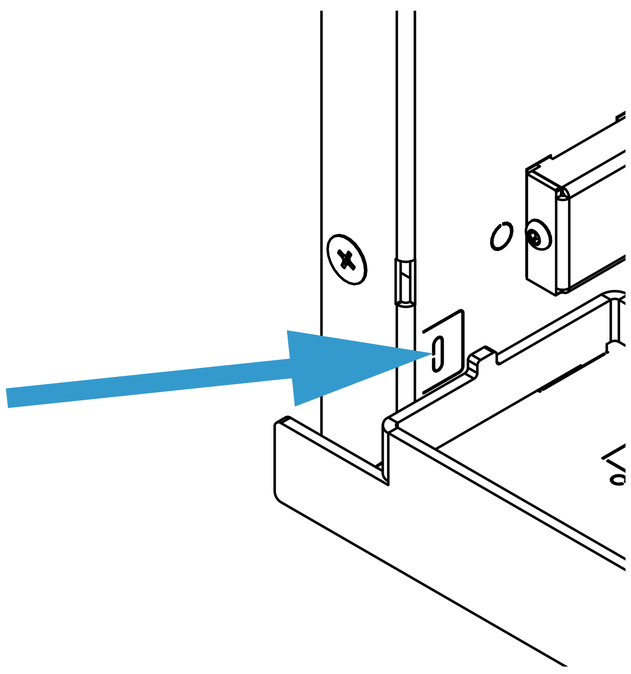

STEP 4: Set VB1/adapter plate assembly into camera plate slots and tighten securely from underneath.

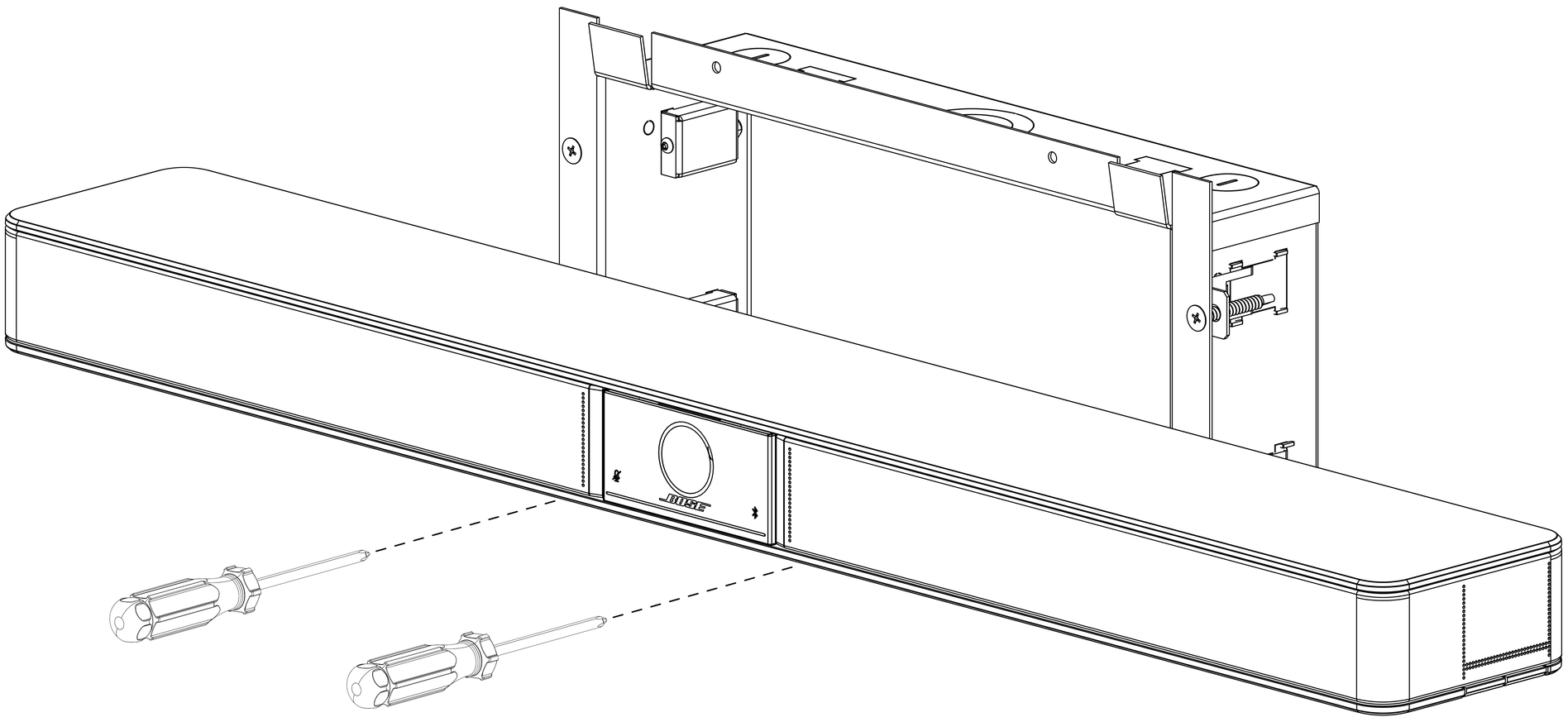
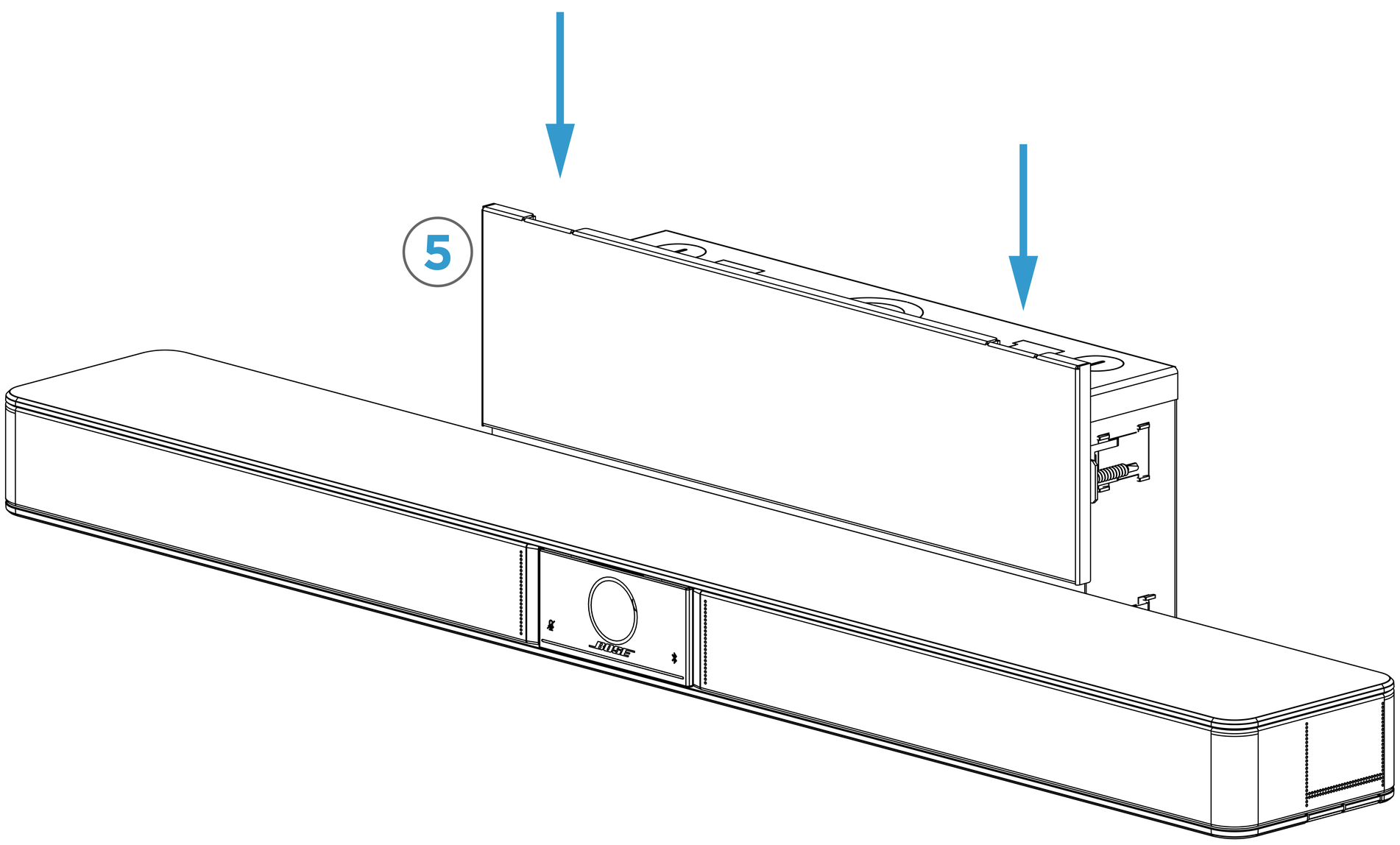
STEP 5: Slide Cubby Face (No. 5, Qty 1) Plate down onto tabs in Cubby Backbox.