Sound Control Technologies

RC-CUBBY-X70™ Installation Instructions

Revision B, 1/13/2026

RC-CUBBY-X70™ Cubby Wall Mount for Poly X70/X72

INCLUDED PART LIST

No. 1 Cubby Backbox, 804-1147 (Qty 1)
No. 2 Wall Clamps, 800-1107 (Qty 4)
No. 3 Camera Plate, 811-1147 (Qty 1)
No. 4 Adapter Plate, 810-1176 (Qty 1)
No. 5 Cubby Split Face Plate Bottom, 806-1147 (Qty 1)
No. 6 Cubby Split Face Plate Top, 808-1109 (Qty 1)
No. 7 6-32 x 1/4", Phillips Screw, White, 860-0058 (Qty 2)
No. 8 M5 x 8mm, Phillips Flat Head Screw, 860-0071 (Qty 4)

PARTS NOT INCLUDED

No. 9 Poly X70 or X72 (Qty 1)
No. 10 Poly Hinge Bracket (Qty 1)
No. 11 M4 Flat Head Screw (Qty 4)

ASSEMBLY INSTRUCTIONS

STEP 1: Install Cubby Backbox (No. 1, Qty 1) into wall opening with Wall Clamps (No. 2, Qty 4). For detailed instructions refer to the RC-CUBBY Installation Guide on www.soundcontrol.net.

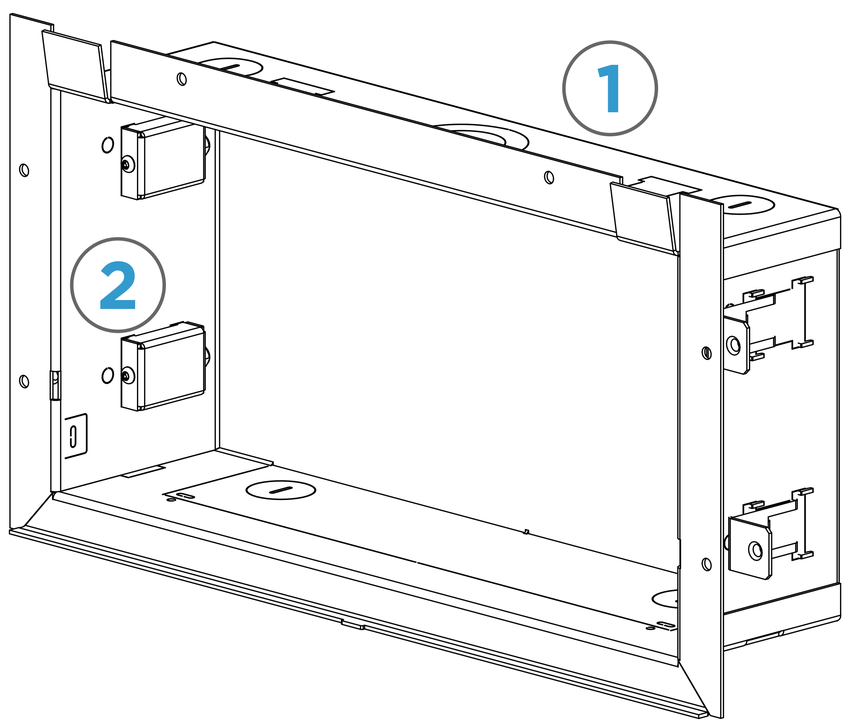

STEP 2: Hook Cubby Split Face Bottom (No. 5, Qty 1) into slots of Backbox. Now slide Camera Plate (No. 3, Qty 1) down into Cubby slots (shown in red) and push forward to engage. Then pry tabs inward to lock Camera Plate in place.

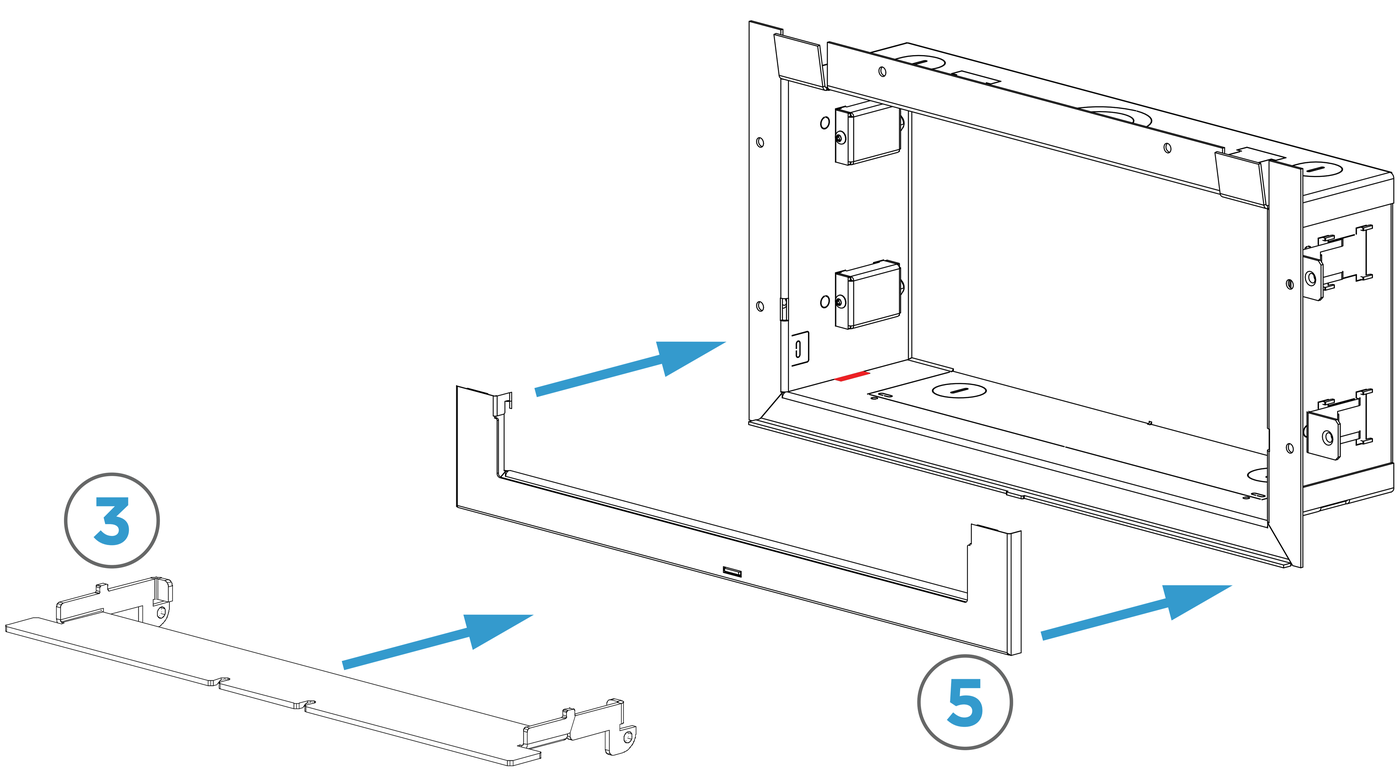

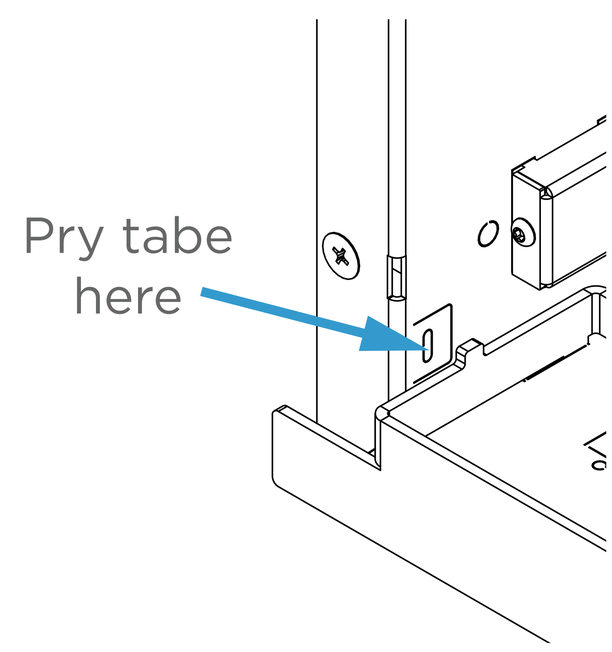

STEP 3: Attach Poly Hinge Bracket (No. 10, Qty 1) to video bar (No. 9, Qty 1) using Poly-supplied M4 screws (No. 11, Qty 4).

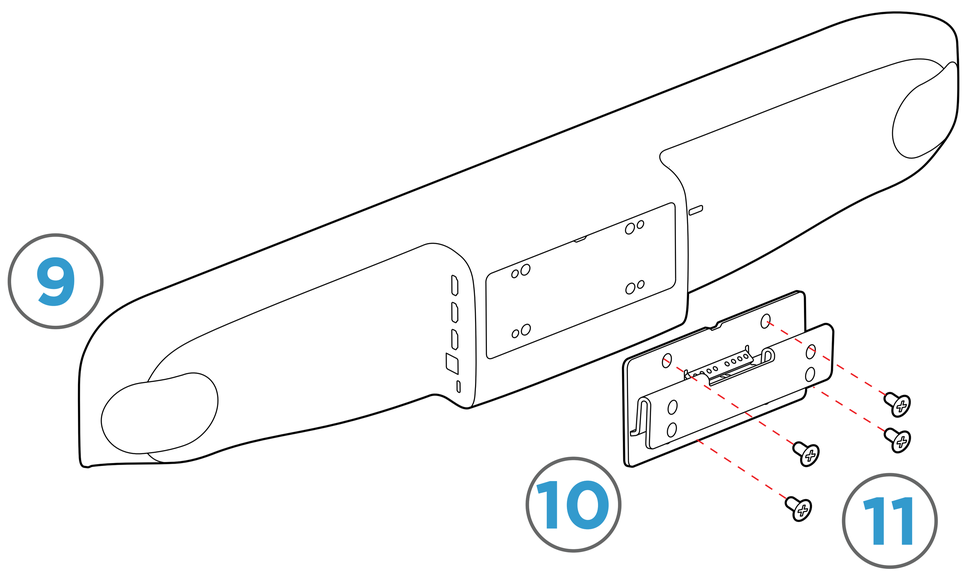

STEP 4: Partially install 6-32 x 1/4” White Phillips Screws (No. 7, Qty 2) into Adapter Plate (No. 4, Qty 1) using the front holes. Do not tighten. Slide Adapter Plate into Poly Hinge Bracket and secure with Poly-supplied M5 Flat Head Screws (No. 8, Qty 4).

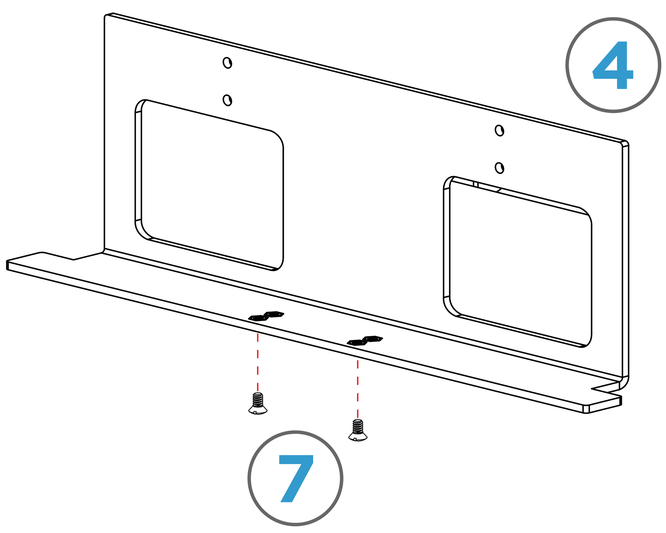

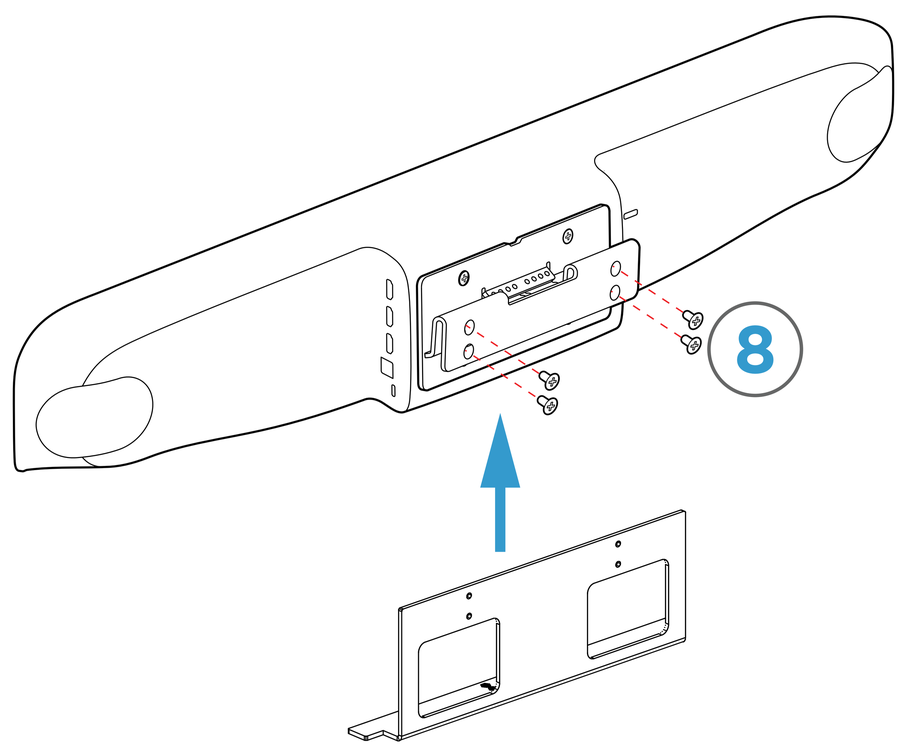

STEP 5: Slide camera assembly into slots on Camera Plate and tighten screws from bottom.

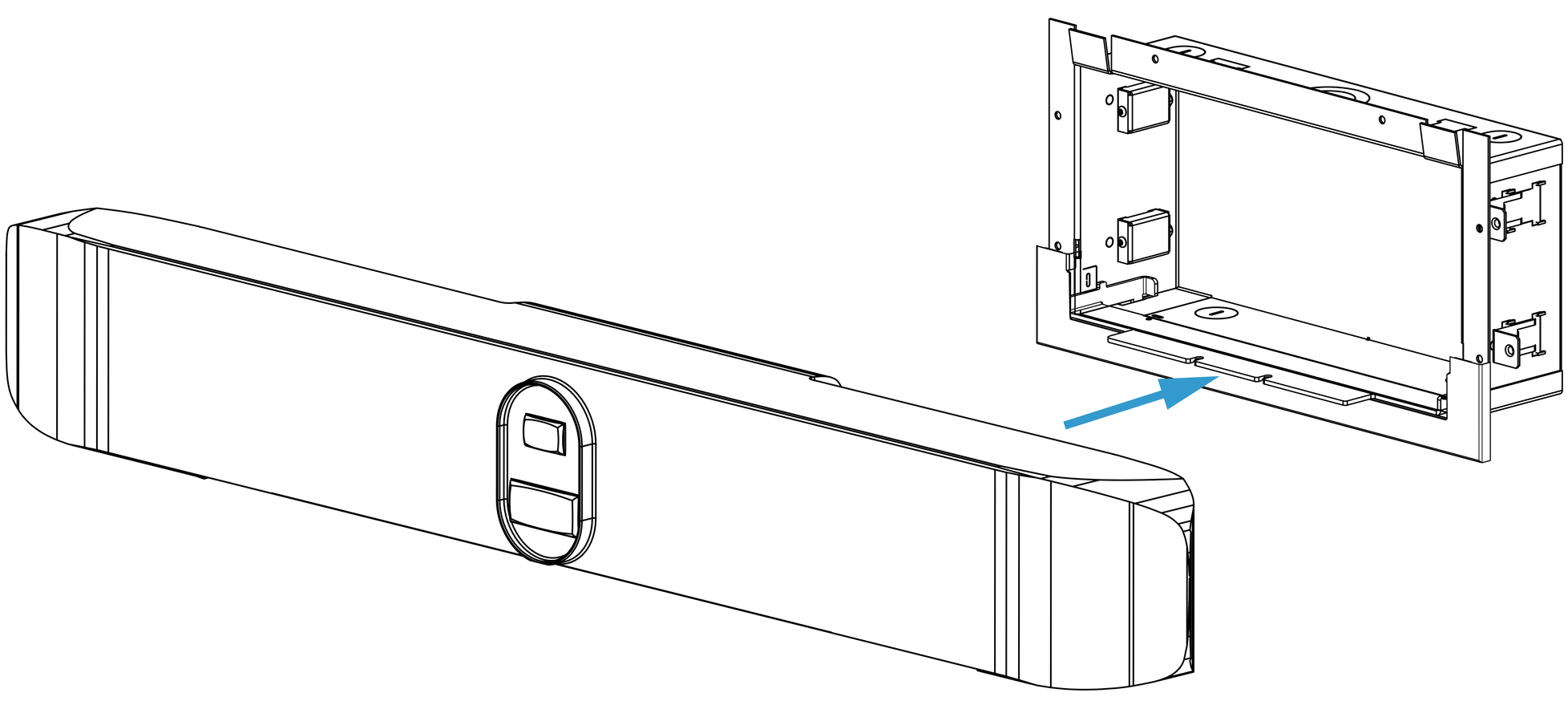
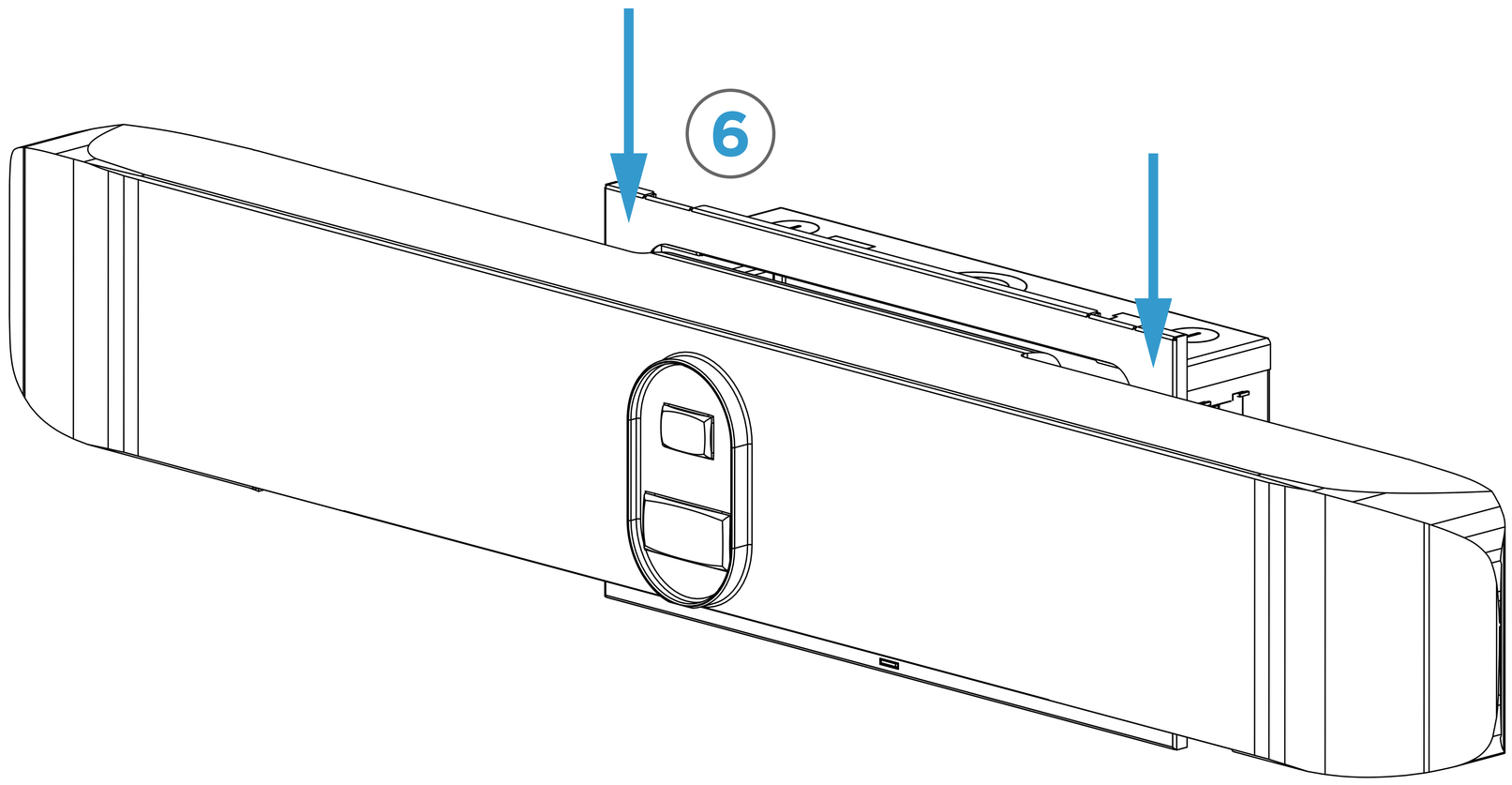
STEP 6: Slide Cubby Face Plate top (No. 6, Qty 1) down onto tabs in Cubby Backbox.