Sound Control Technologies

TS1™ Installation Instructions

Revision A, 4/18/2025

TS1™ Under Table Mounting Solution

INCLUDED PART LIST

No. 1 TS1 Crossbar, 802-1339 (Qty 1)
No. 2 TS1 Left Bracket, 803-1339 (Qty 1)
No. 3 TS1 Right Bracket, 804-1339 (Qty 1)
No. 4 TS1 Adjustable Clamp, 806-1339 (Qty 2)
No. 5 TS1 Main Shelf, 801-1339 (Qty 1)
No. 6 4-40 x 1/4", Phillips Pan Head Screw, 860-0025 (Qty 2)
No. 7 M4 x 4mm, Phillips Pan Head Screw, 860-0035 (Qty 4)

ASSEMBLY INSTRUCTIONS

STEP 1: Attach TS1 Crossbar (No. 1, Qty 1) to Left Bracket (No. 2, Qty 1) and Right Bracket (No. 3, Qty 1) using M4 x 4mm Screws (No. 7, Qty 4).

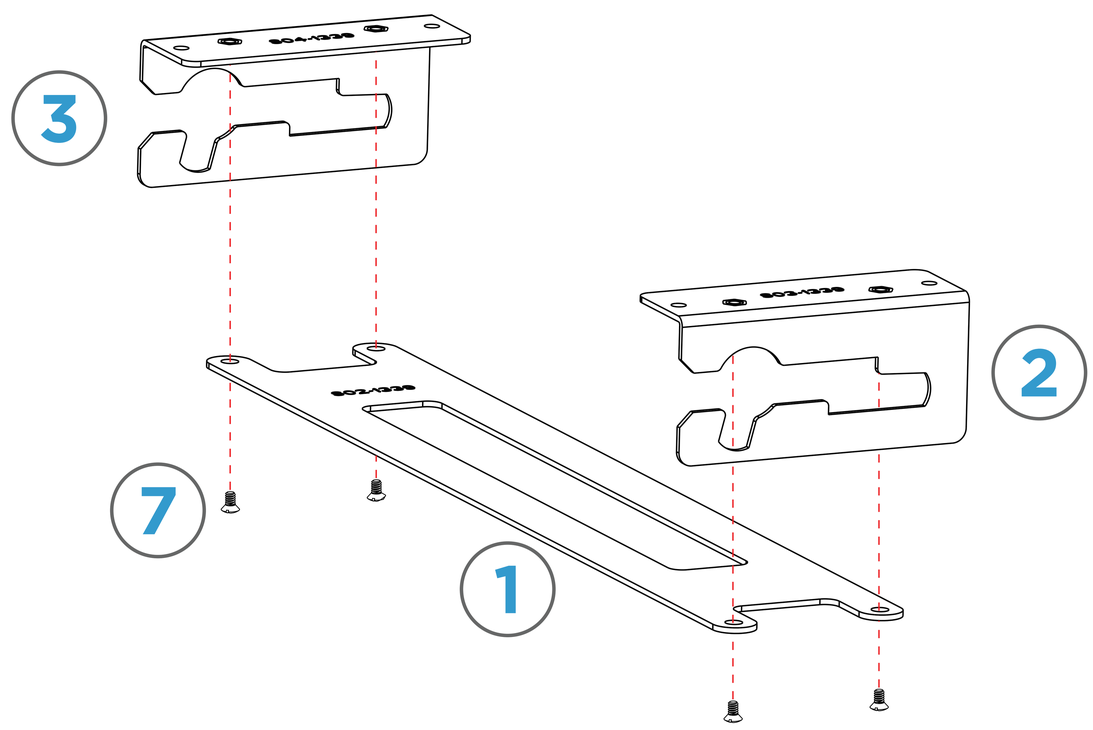

STEP 2: Hold the assembly from Step 1 under the table surface in the desired location. Install appropriate table screws (not provided) in the four outer holes.

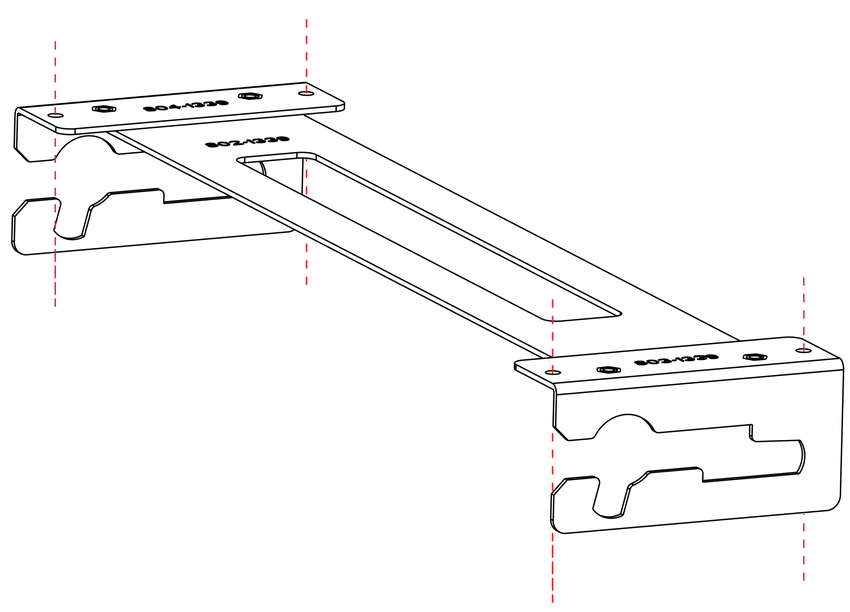

STEP 3: Attach TS1 Adjustable Clamps (No. 4, Qty 2) to TS1 Main Shelf (No. 5, Qty 1) using 4-40 x 1/4” screws (No. 6, Qty 2). Slide RTK Transmitter module under clamps and tighten in place.

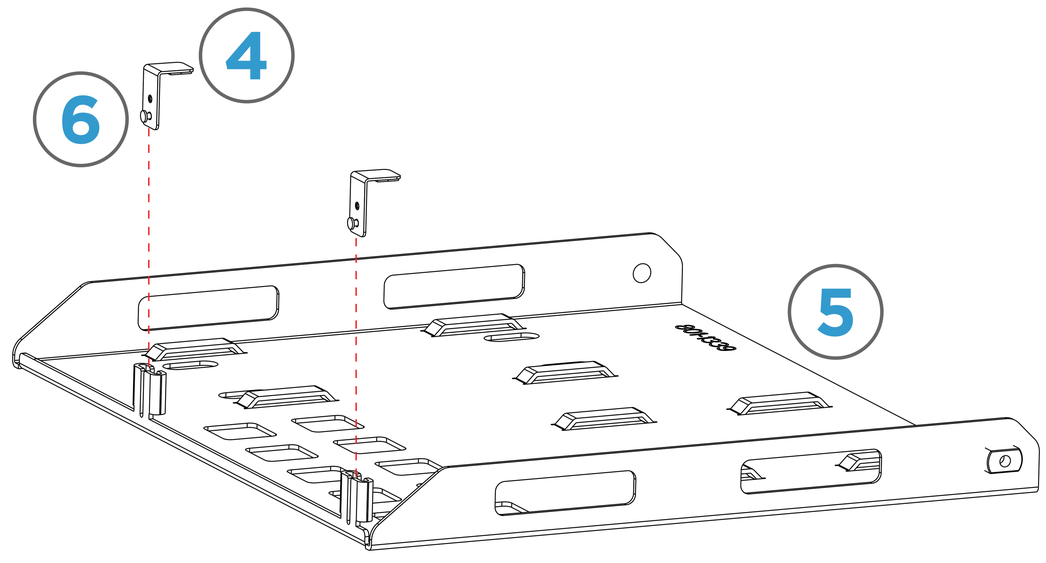

STEP 4: Slide shelf assembly into crossbar/bracket assembly under the table. There are two angled positions to facilitate wiring.

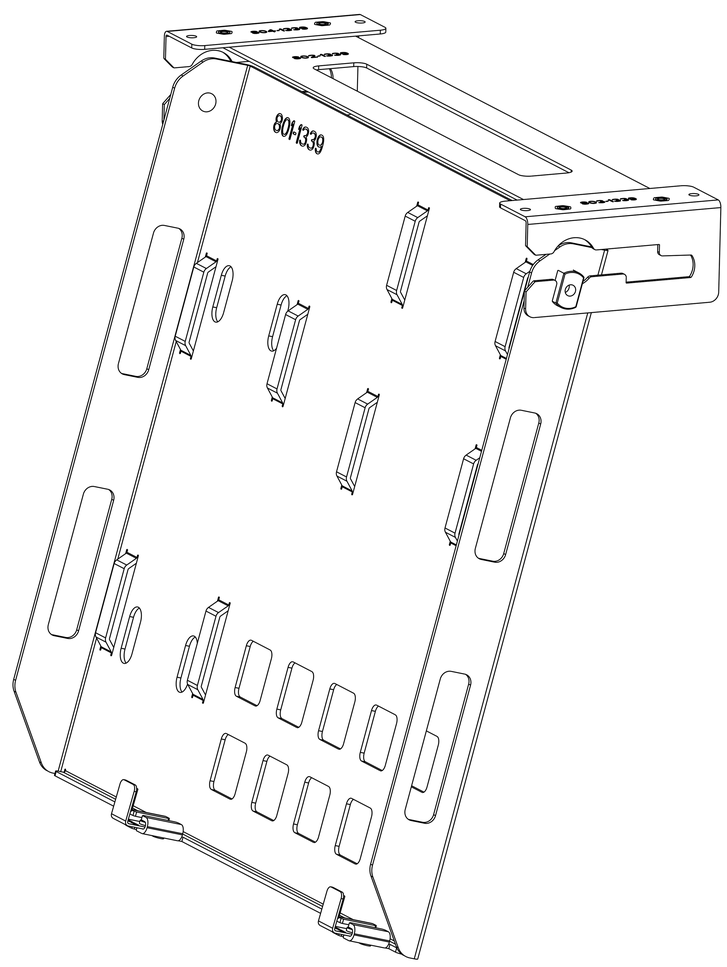
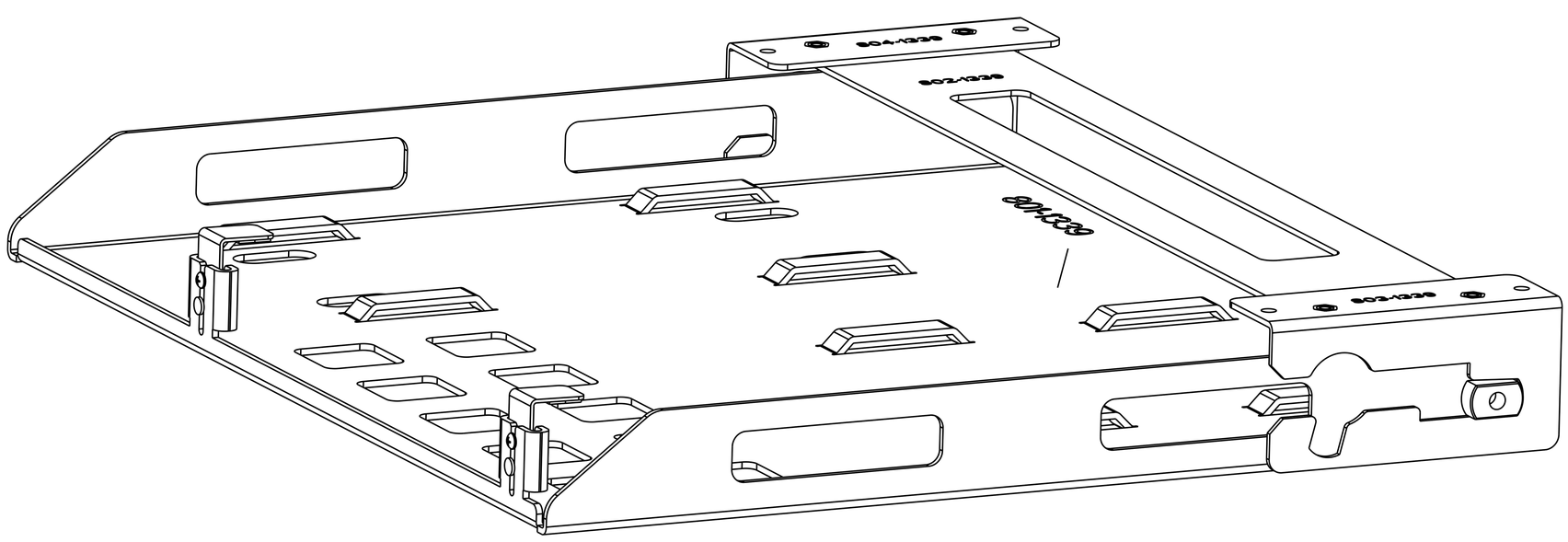
STEP 4: When finished dressing wires the shelf can be moved into final position parallel with the table surface, out of the way.