Sound Control Technologies

RC-RKF Installation Instructions

Revision A 3/4/2025

RC-RKF1™, RC-RKF2™, RC-RKF3™ Rack Shelves

INCLUDED PART LIST

No. 1 Rack Shelf Base, 801-1320 (Qty 1)
No. 2 Rack Shelf Left Panel, 802-1320 (Qty 1)
No. 3 Rack Shelf Right Panel, 803-1320 (Qty 1)
No. 4 4-40x3/16" Flat Head Phillips Screw, 860-0063 (Qty 8)
No. 5 Faceplate (RKF1: 804-1320, RKF2: 804-1321, RKF3: 804-1340, Qty 1)

ASSEMBLY INSTRUCTIONS

STEP 1: Attach Right and Left Rach Shelf Panels (No. 2 & 3, Qty 1 ea) to Rack Shelf Base (No. 1, Qty 1) using 4-40x3/16" Flat Head Screws (No. 4, Qty 6).

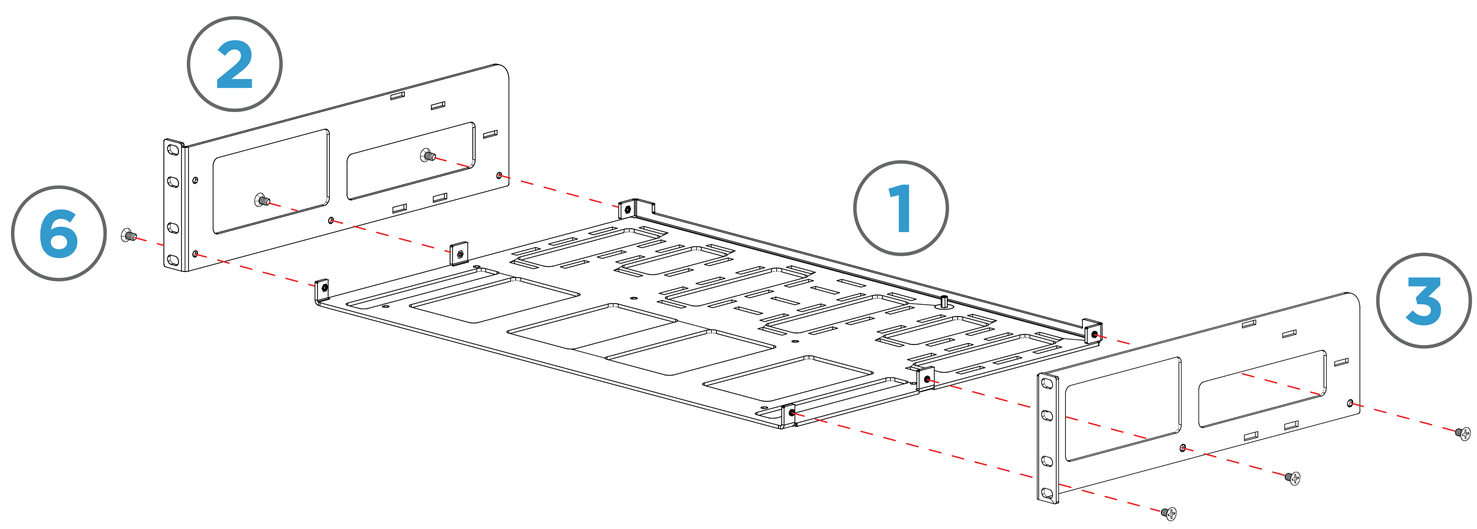
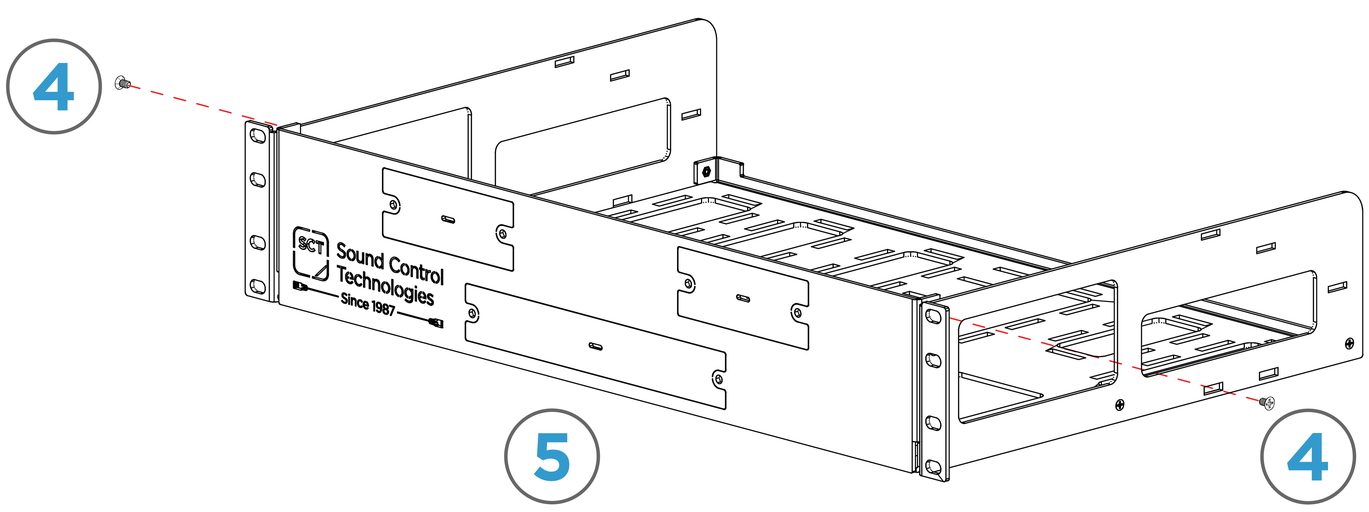
STEP 2: Remove knockouts as needed from Faceplate (No. 5, Qty 1). Attach faceplate to assembly using the remaining 4-40x3/16" Flat Head screws (No. 4, Qty 2).