Sound Control Technologies

RC-RKPA™ Installation Instructions

Revision A, 4/23/2025

RC-RKPA™ Rack Mount System

INCLUDED PART LIST

No. 1 RC-RKPA Power Supply Cradle, 801-1333 (Qty 1)
No. 2 RC-RKPA L-Bracket, 802-1333 (Qty 4)
No. 3 RKPA-BRKT Wall Mount L-Bracket, 803-1333 (Qty 2)
No. 4 8-32 x 5/16", Phillips Flat Head Screw, 860-0070 (Qty 4)
No. 5 10/32 x 7/8" Phillips Pan Head Screw, 860-0073 (Qty 4)

PARTS NOT INCLUDED

No. 6 RX Module

ASSEMBLY INSTRUCTIONS

STEP 1: Attach Power Supply Cradle (No. 1, Qty 1) and RC-RKPA L-Bracket (No. 2, Qty 1) to RX Module (No. 6, Qty 1) using 8-32 x 5/16" Phillips Flat Head Screws (No. 4, Qty 4).

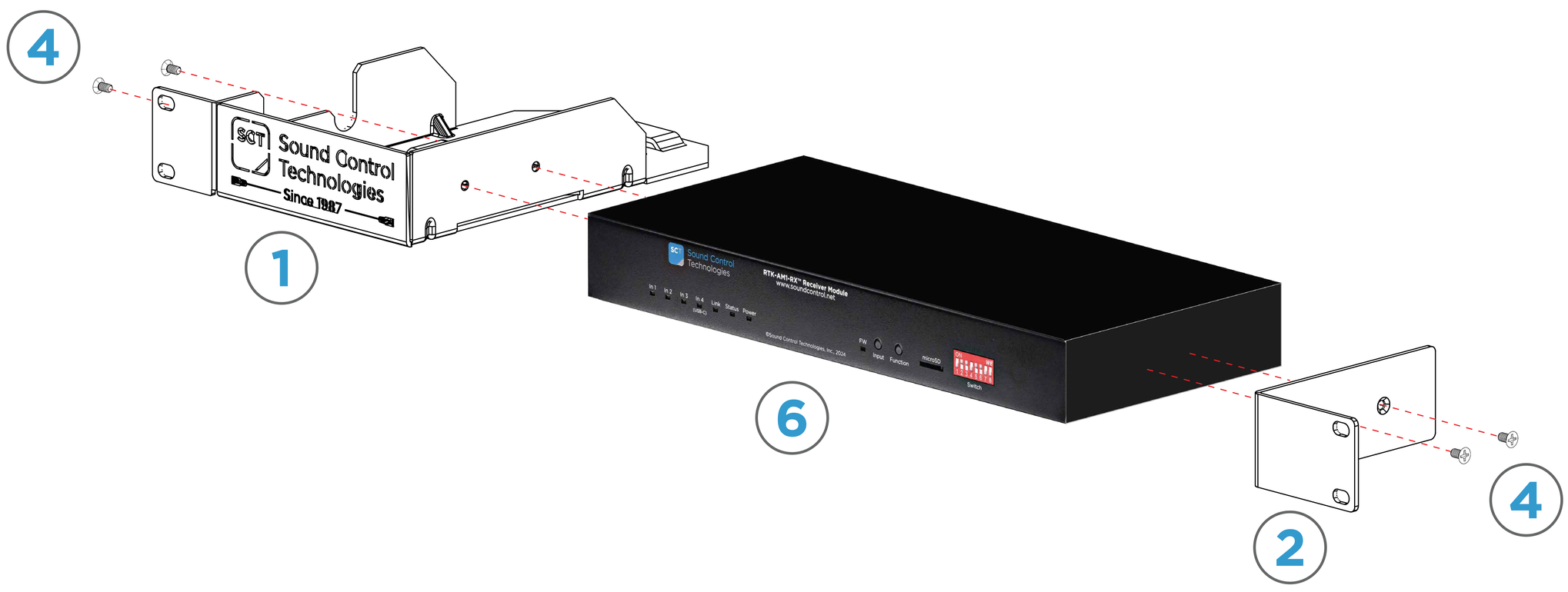
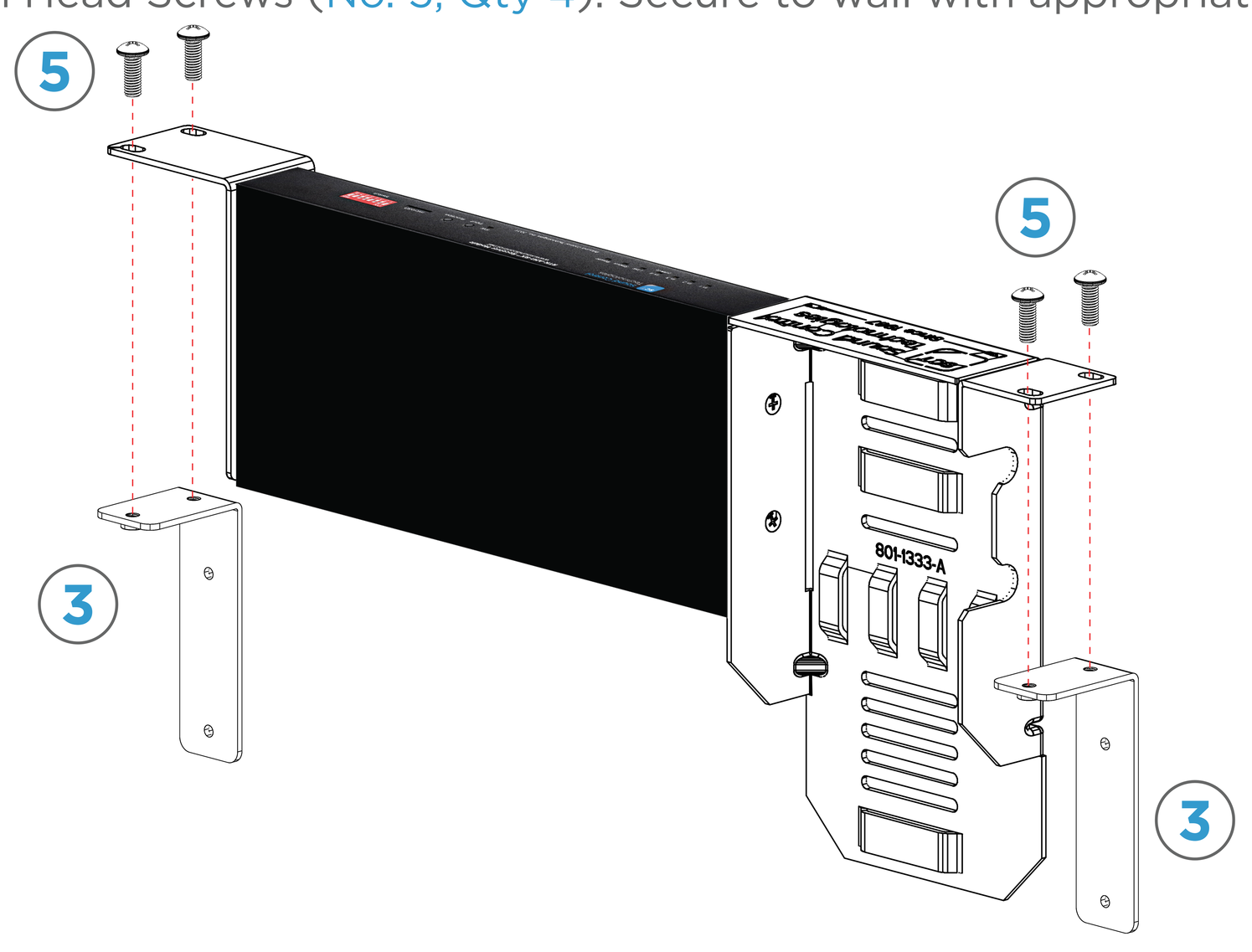
STEP 2 (Optional): If mounting to wall, attach RKPA-BRKT Wall Mount L-Bracket (No. 3, Qty 2) using 10/32 x 7/8" Pan Head Screws (No. 5, Qty 4). Secure to wall with appropriate screws (not provided).