Sound Control Technologies

RCP-CW4™ Installation Instructions

Revision A 3/4/2025

RCP-CW4™ Pole Mounting Solution for Cisco PTZ 4K Camera

INCLUDED PART LIST

No. 1 RCP-CW4 Camera Shelf, 817-1152 (Qty 1)
No. 2 RCP-CW4 Bracket, 820-1152 (Qty 1)
No. 3 8-32 Cap Nut, 850-0008 (Qty 2)
No. 4 1/4-20 Thumb Screw, 860-0005 (Qty 1)
No. 5 1.5” Steel Locknut, 845-0013 (Qty 2)
No. 6 RCP-CW4 Cover, 818-1152 (Qty 1)
No. 7 6-32x1/4” Oval Head Slotted White Screw, 860-0058 (Qty 1)
No. 8 6-32x1/4” Pan Head Philips Screw, 860-0074 (Qty 2)

PARTS NOT INCLUDED

No. 9 1.5” NPT Pole (Qty 1)
No. 10 Cisco PTZ 4K Camera (Qty 1)
No. 11 SCT RC5-CE Module (Qty 1)

ASSEMBLY INSTRUCTIONS

STEP 1: Thread 1.5” Steel Locknut (No. 5, Qty 2) onto NPT Pole (No. 9, Qty 1). Then slide RCP-CW4 Bracket (No. 2, Qty 1) onto NPT Pole with the tab hole towards the front, followed by another 1.5” Steel Locknut. Tighten top locknut to secure Bracket.

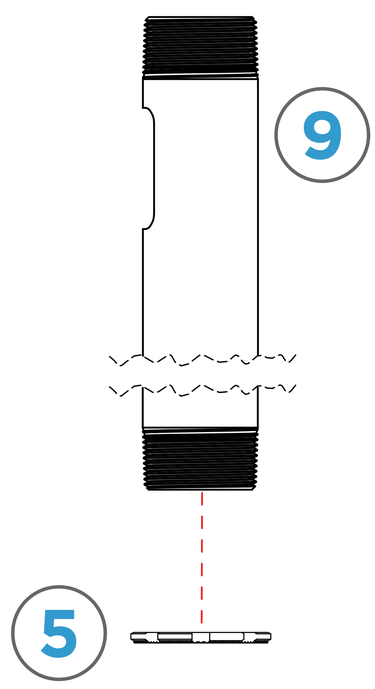

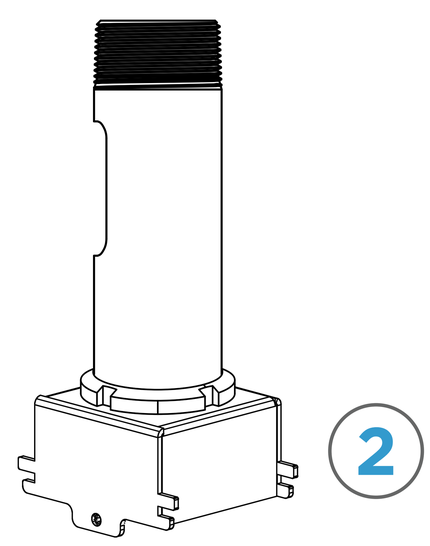

Attach 1.5” NPT Pole to ceiling using appropriate methods and safety codes.

STEP 2: Attach RC5-CE module (No. 11, Qty 1) to Camera Shelf (No. 1, Qty 1) using screws provided with RC5-CE.

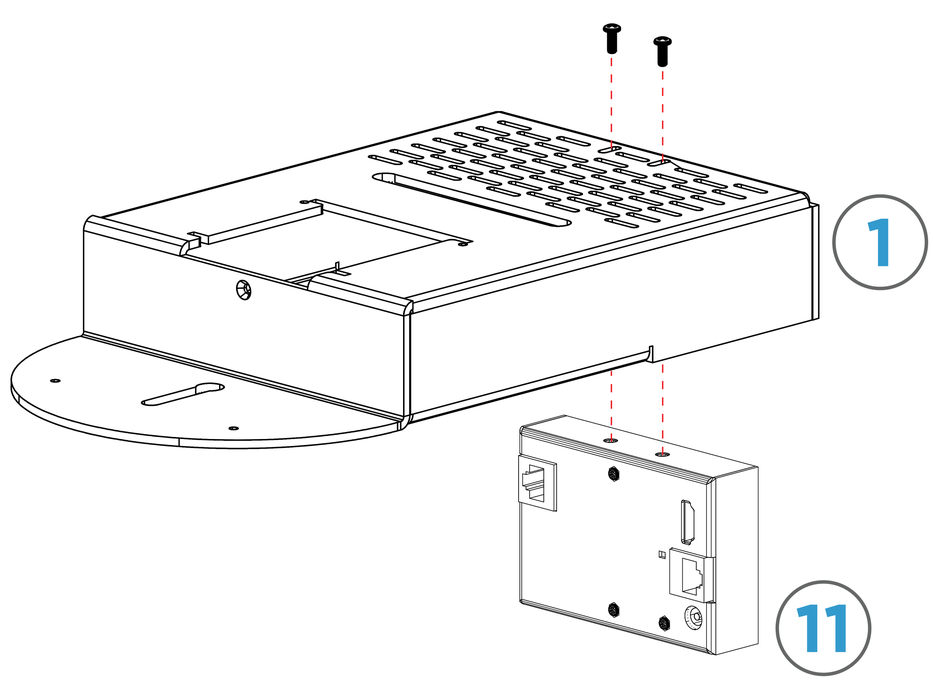

STEP 3: Attach Camera (No. 10, Qty 1) to Camera Shelf (No. 1, Qty 1) using 1/4-20 Thumb Screw (No. 4, Qty 1).

STEP 4: Install shelf/camera assembly onto RCP-CW4 bracket and secure with 6-32x1/4" Oval Head Screw (No. 7, Qty 1) and 6-32x1/4" Pan Head Screws (No. 8, Qty 2).

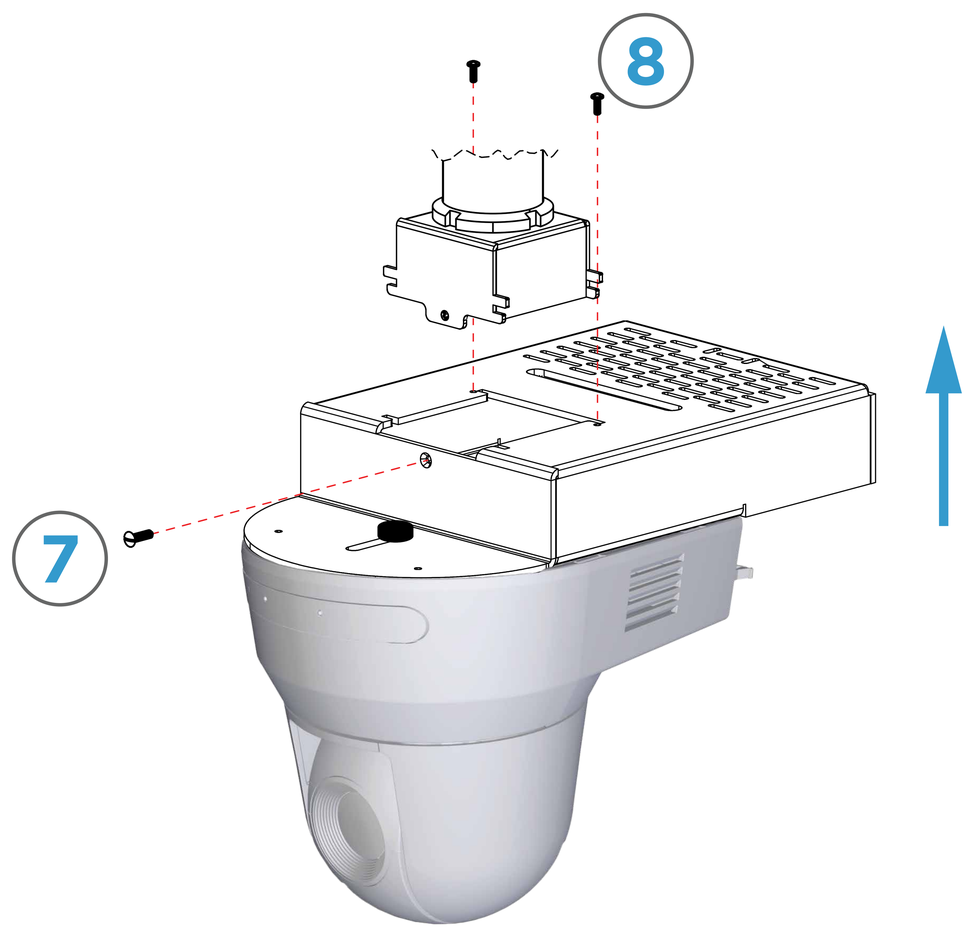
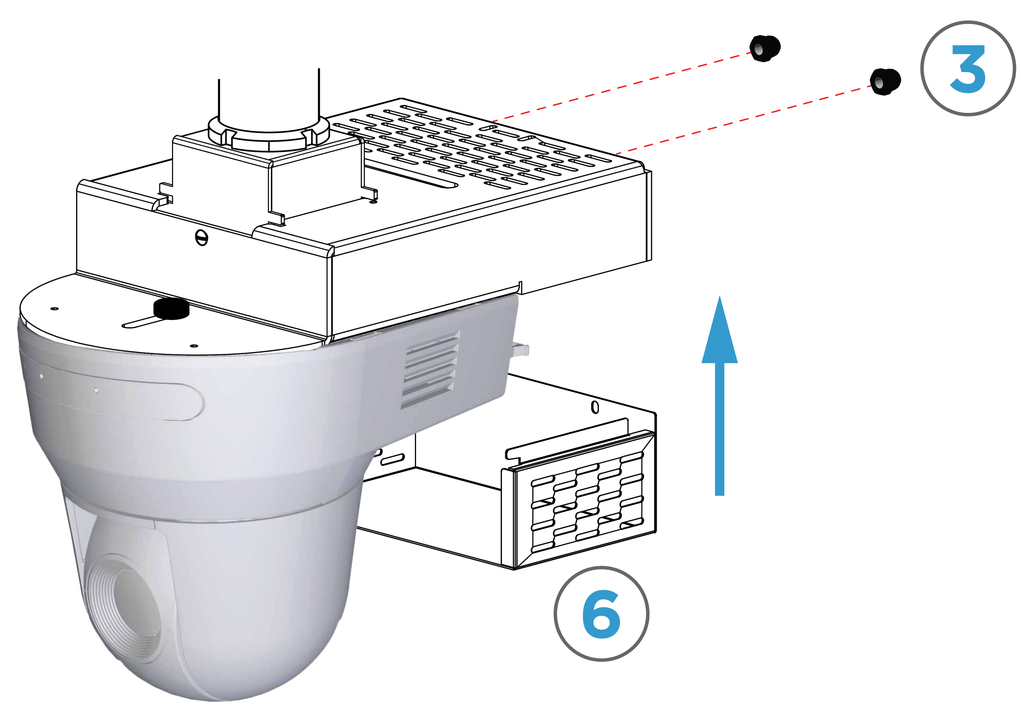
STEP 5: Connect wiring and install RCP-CW4 Cover (No. 6, Qty 1) using white Cap Nuts (No. 3, Qty 2).