Sound Control Technologies

RWM-CRN2™ Installation Instructions

Revision A 8/13/2026

RWM-CRN2™ Wall Mounting Solution for Cisco Table Navigator

INCLUDED PART LIST

No. 1 Navigator Back Plate, 816-1147 (Qty 1)
No. 2 Table Navigator Adapter Plate, 817-1147 (Qty 1)

PARTS NOT INCLUDED

No. 3 Cisco Room Navigator (table version)

ASSEMBLY INSTRUCTIONS

STEP 1: Attach Navigator Back Plate (No. 1, Qty 1) to wall using screws appropriate for wall construction. Plate may also be installed on a VESA mount if desired. Pull cable through plate.

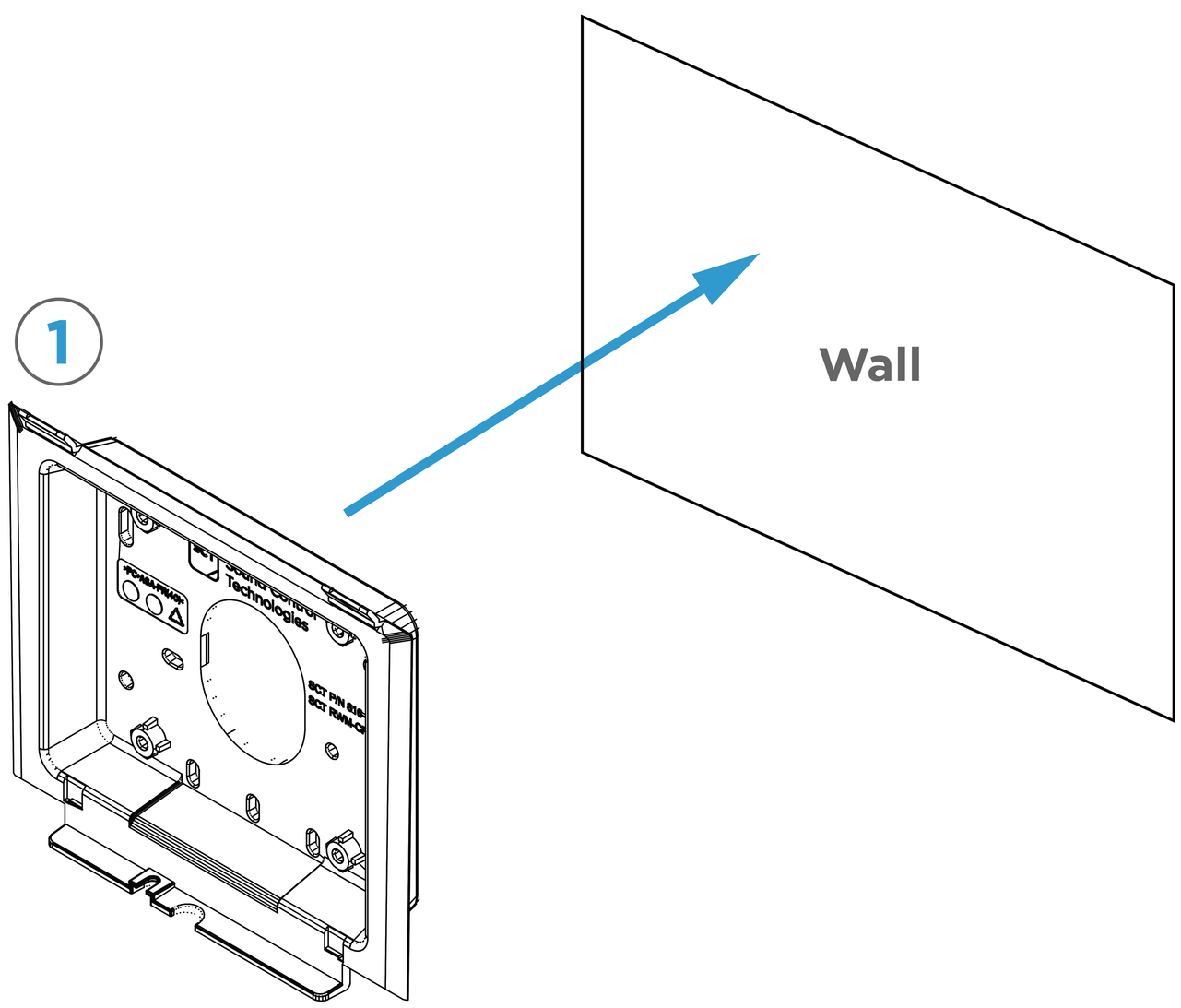

STEP 2: Align top tabs of Back Plate with slots in Table Navigator Adapter Plate (No. 2, Qty 1) and drop into place. Tighten screw pre-installed in Adapter Plate to secure.

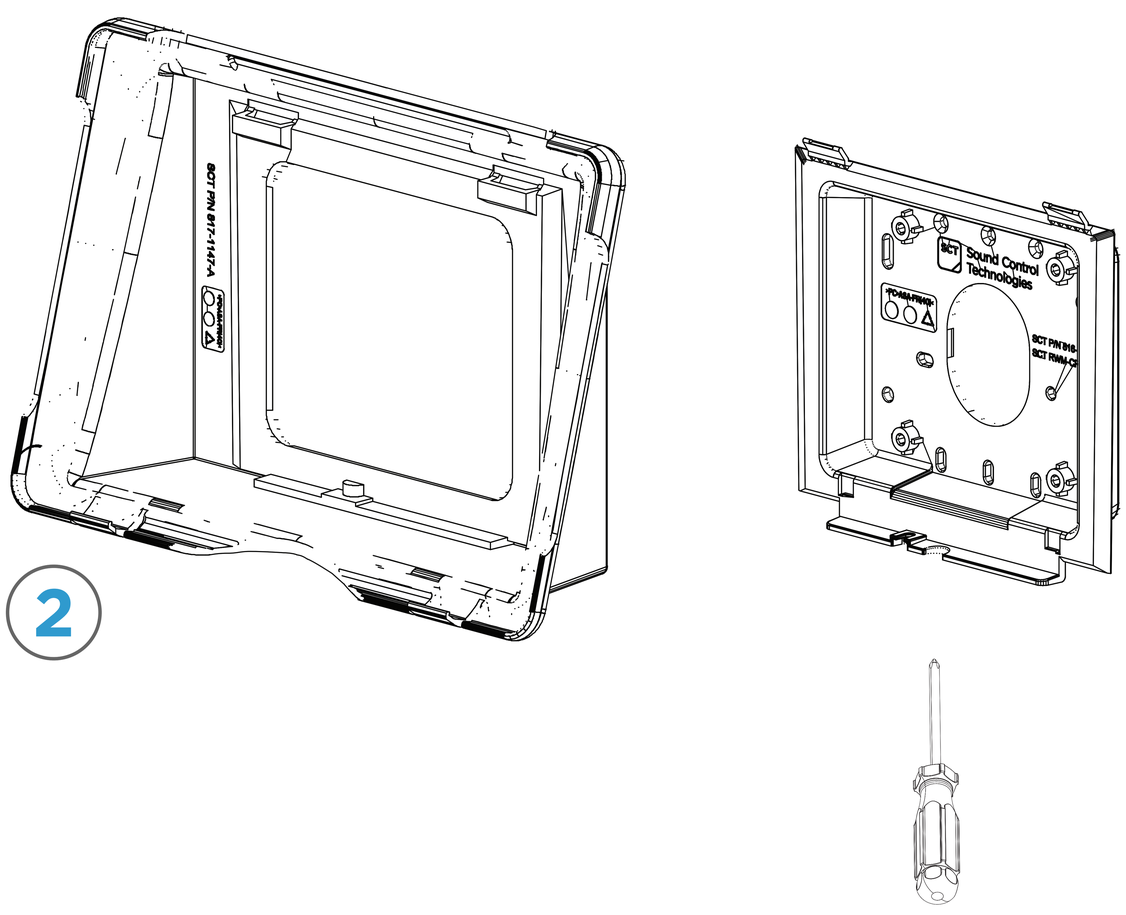
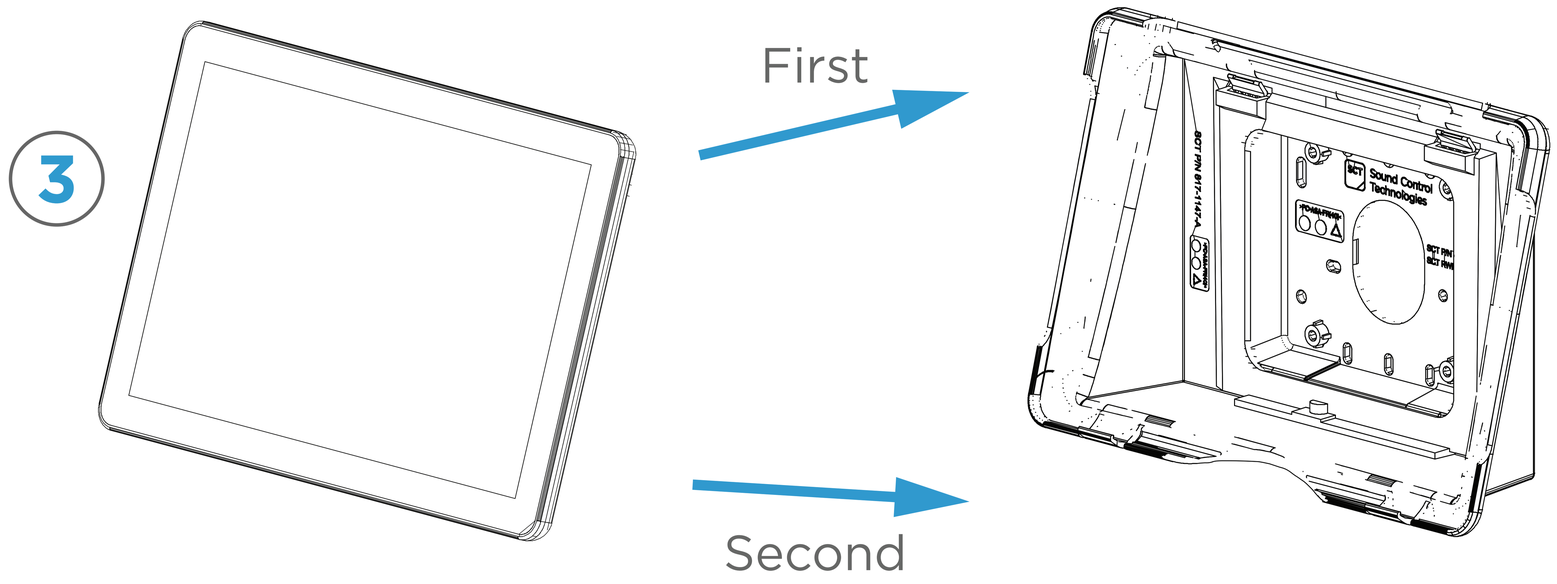
STEP 3: Plug pre-installed cable into Cisco Room Navigator (No. 3, Qty 1). Starting at the top fit Navigator panel into mount, then snap bottom into place.