Sound Control Technologies

RCP-CRV™ Installation Instructions

Revision A 7/31/2026

RCP-CRV™ Pole Mounting Solution for Cisco Room Vision Camera

INCLUDED PART LIST

No. 1 RCP-CRV Camera Shelf, 823-1152 (Qty 1)
No. 2 RCP Bracket, 820-1152 (Qty 1)
No. 3 8-32 Cap Nut, White, 850-0008 (Qty 2)
No. 4 1/4-20x3/8" Thumb Screw, 860-0043 (Qty 1)
No. 5 1.5" Steel Locknut, White, 845-0018 (Qty 2)
No. 6 RCP-CRV Cover, 824-1152 (Qty 1)
No. 7 6-32x1/2" Oval Head Phillips Screw, White, 860-0058 (Qty 1)
No. 8 6-32x1/4" Pan Head Philips Thread-Cutting Screw, 860-0074 (Qty 2)
No. 9 6-32x5/16" Truss Head Philips Screw, White, 860-0034 (Qty 2)

PARTS NOT INCLUDED

No. 10 1.5" NPT Pole (Qty 1)
No. 11 Cisco Room Vision Camera (Qty 1)
No. 12 SCT RC5+CE Module (Qty 1)

ASSEMBLY INSTRUCTIONS

STEP 1: Thread 1.5" Steel Locknut (No. 5, Qty 1) onto NPT Pole (No. 10, Qty 1). Then slide RCP Bracket (No. 2, Qty 1) onto NPT Pole with the tab hole towards the front, followed by another 1.5" Steel Locknut. Tighten top locknut to secure Bracket.

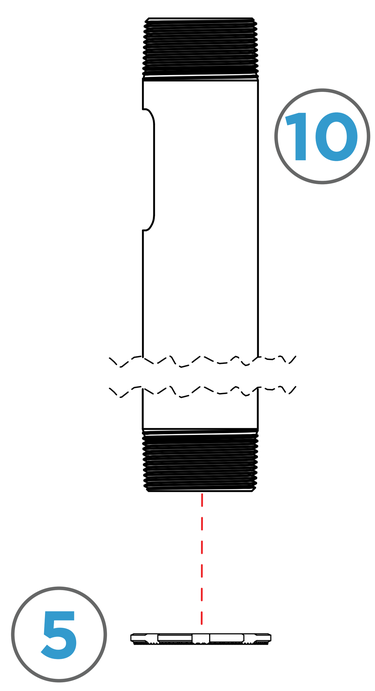

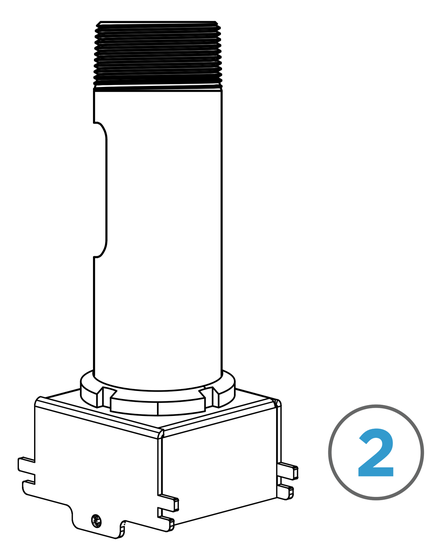

Attach 1.5" NPT Pole to ceiling using appropriate methods and safety codes.

STEP 2: Attach RC5+CE module (No. 12, Qty 1) to Camera Shelf (No. 1, Qty 1) using 6-32x5/16" Truss Head Phillips Screws (No. 9, Qty 2).

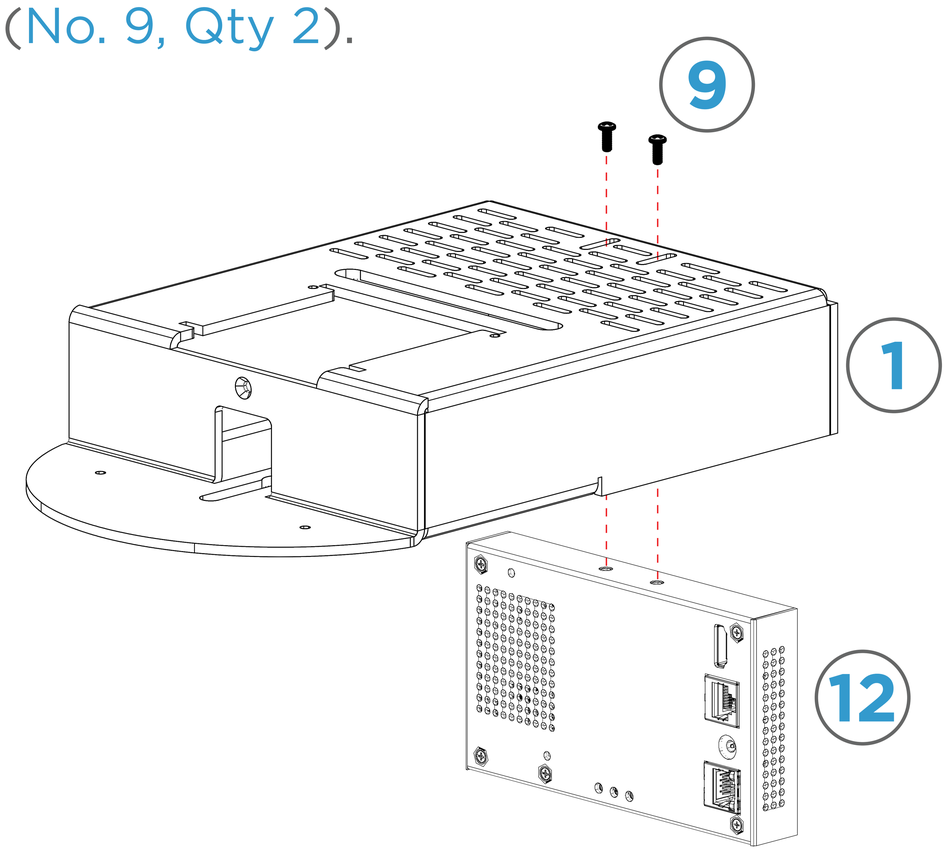

STEP 3: Attach Camera (No. 11, Qty 1) to Camera Shelf (No. 1, Qty 1) using 1/4-20x3/8” Thumb Screw (No. 4, Qty 1).

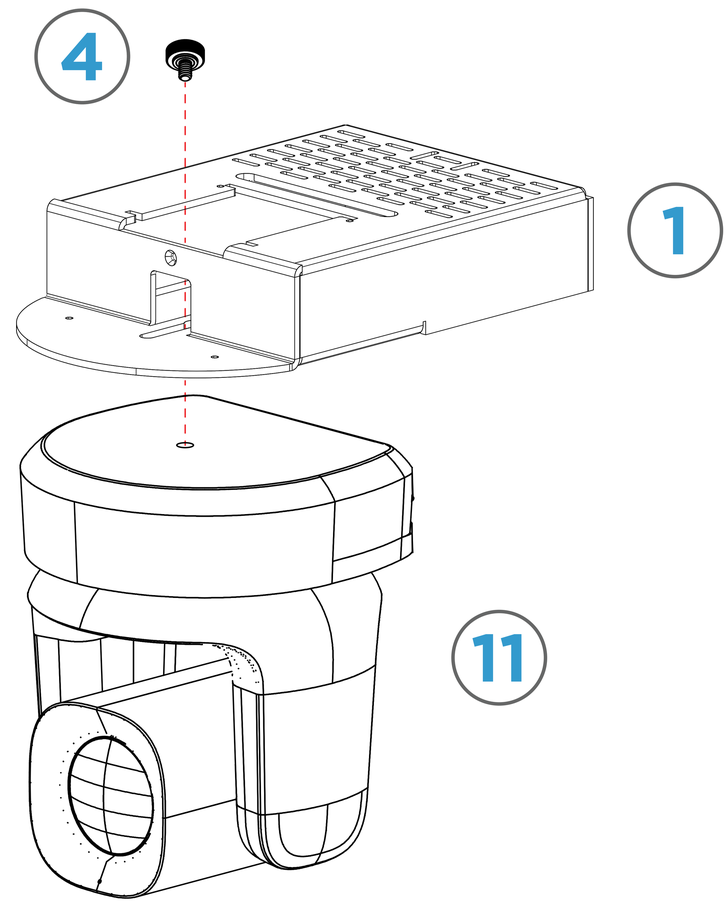

STEP 4: Install shelf/camera assembly onto RCP bracket and secure with 6-32x1/2” Oval Head Screw (No. No. 7, Qty 1) and 6-32x1/4” Pan Head Phillips Thread-Cutting Screws (No. 8, Qty 2).

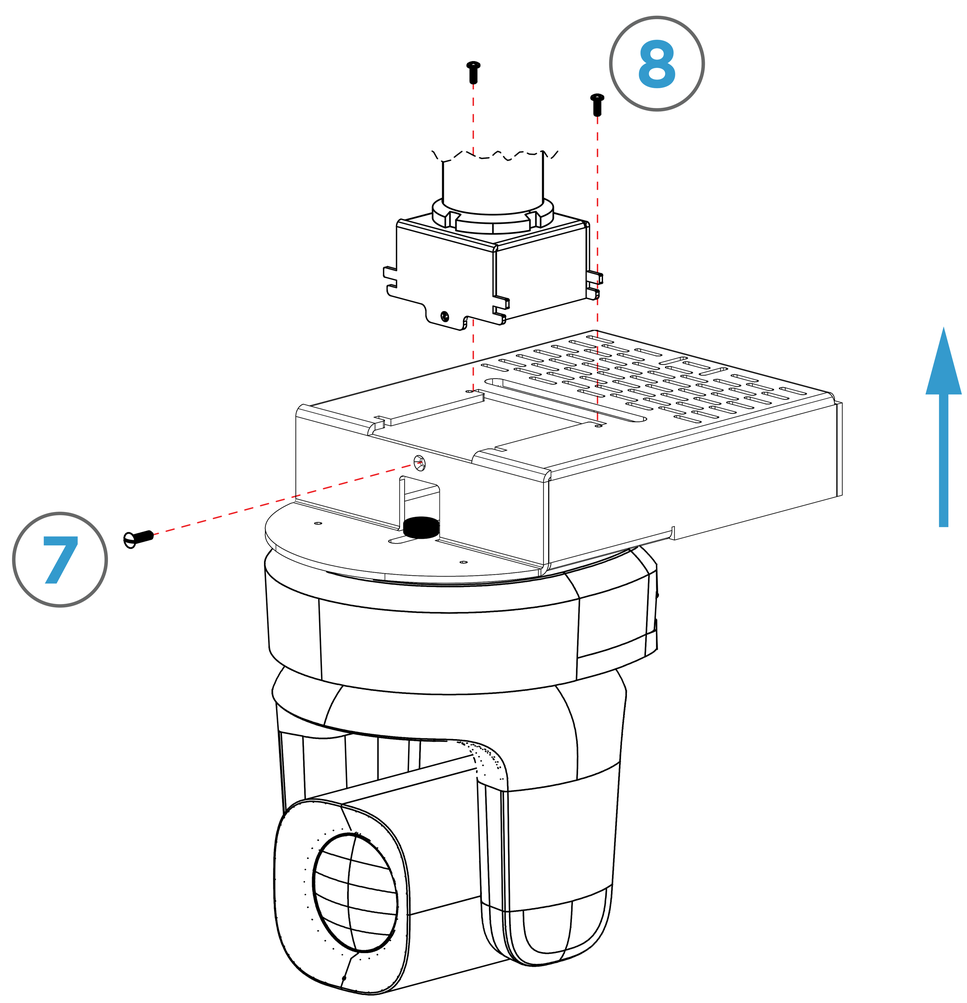
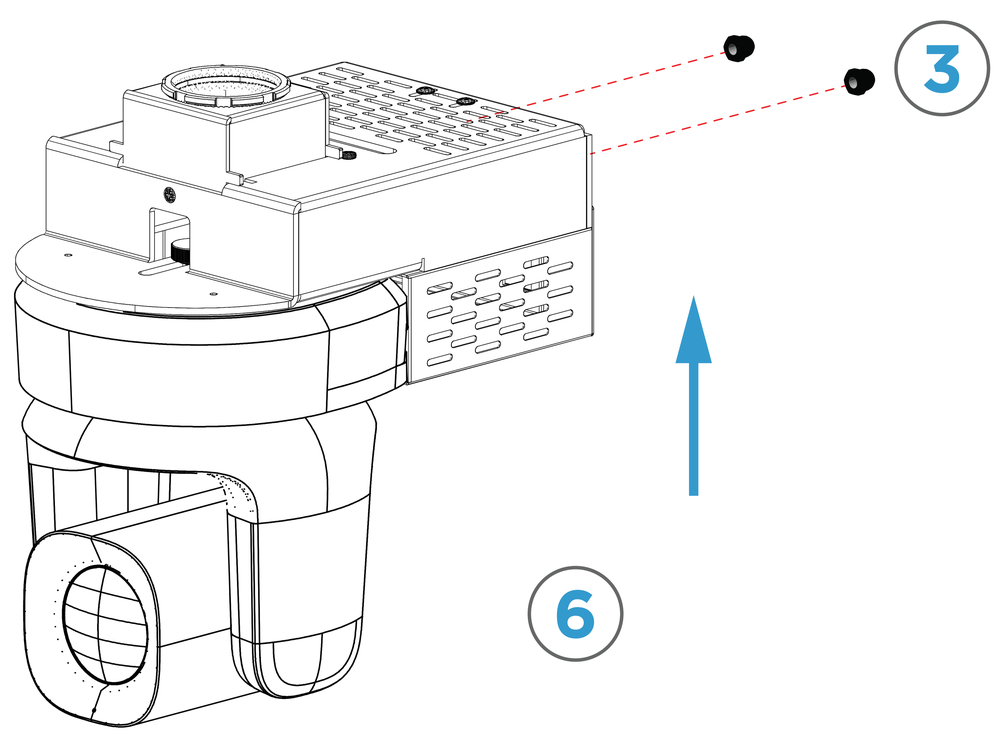
STEP 5: Connect wiring and install RCP-CRV Cover (No. 6, Qty 1) using white Cap Nuts (No. 3, Qty 2).